Magnetostriktionsgenerator 1kW

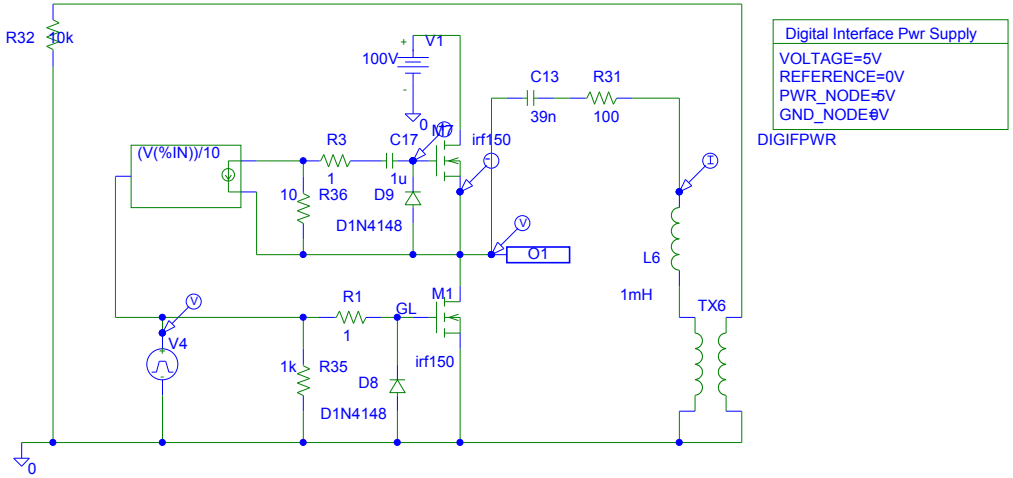

Digital Interface Pwr Supply

VOLTAGE=5V
REFERENCE=0V
PWR_NODE=5V
GND_NODE=0V

DIGIFPWR

MicroSim Corporation
20 Fairbanks
Irvine, CA 92718
714-770-3022

Page Size: A4

Revision: - January 1, 2000 Page 1 of 1